Theory of Automatic Control

Specific Objectives

- Components of Control System
- Introduction to Control System
- Explain different types of control system
- Laplace Transformation
- Develop transfer function
- Develop and solve block diagram of control system

Components of Control system

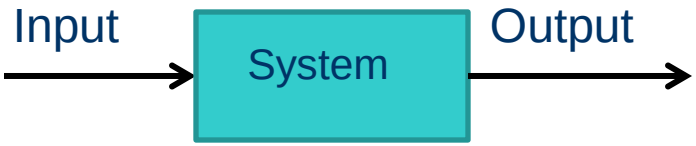

Input: The excitation or actual signal applied to the system from an external source to attain an output is called input signal.

Output: The actual response obtained from a system is called output.

System: A system is a combination of components that act together to perform a specific goal.

Control: The word control is usually taken to mean regulate, direct or command a system so that the desired objective is attained.

Components of Control system

Process Control: In the system there are some variable at which the whole system works are controlled automatically. This is called process control. variables like pressure, temperature can we change as per the need.

Process Controller: To control the variables of the system the devices are need to be Incorporated. These devices are called process controller.

Feedback: This is very important component of automatic control system. This is the output value of the system which is compared with the input given the system.

Regulator: When there is a need of keeping the value of variables at a constant value there is a device name 'regulator' is used.

Components of Control system

Error Detector: This is a device which uses differential method to detect any error in the system. It compares the output value with the actual desired value of the system. Through this comparison the error in the automatic control system can be detected.

Lag In Response: As the result obtained from the command given to the system is called response. In an automatic control system, when there is a delay to obtain the response from the command due to some causes, delayed is called lag in response. This delay causes the difficulty in the measurement of input and output at the same time.

Components of Control system

Amplification: The process of increasing the amplitude of the signal is called amplification. When there is a need to change the intensity of the input signal amplification method is used. And there is an error in the system detected by the error detector. The error detector is not able to correct that error by itself. Hence the amplitude of the input signal has to be amplified to eliminate that error and get the desired output.

Transducer: This is a unit that takes the input and converts it into another form get to get the desired result. For example there are Some devices which takes pressure as input and converts it into the form of distance to indicate the value of the pressure. Other examples are speedometer, ammeter which converts voltage into the angular distance.

Control System

It is an arrangement of different physical elements connected in such a manner so as to regulate, direct or command itself to achieve a certain objective.

Difference between System and Control System

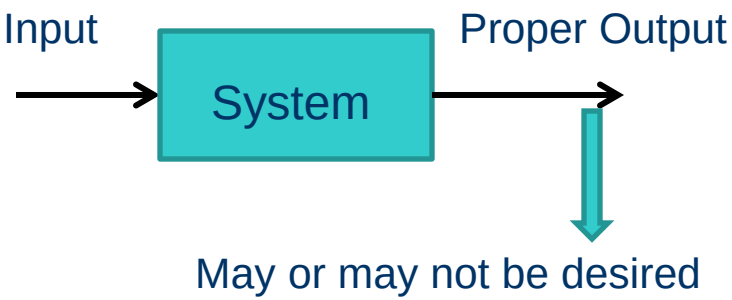

Difference between System and Control System

A Fan can be a System:

A Fan without regulator can be a “System” because it can provide a proper output. i.e. airflow

But it cannot be a “ control system” because it cannot provide desired output. i.e. controlled airflow

Input

230V/50Hz
AC Supply

Output

Airflow
(Proper Output)

Difference between System and Control System

A Fan can be a Control System:

A Fan With regulator can be a “Control system” because it can provide a desired output. i.e. Controlled airflow

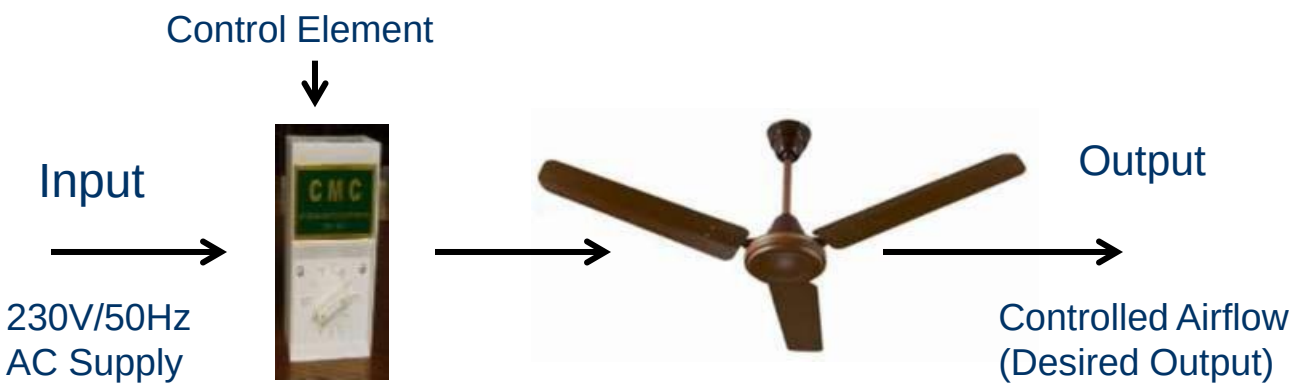

Requirement of good control system

Accuracy: Accuracy is the measurement tolerance of the instrument and defines the limits of the errors made when the instrument is used in normal operating conditions. Accuracy can be improved by using feedback elements. To increase accuracy of any control system error detector should be present in control system.

Sensitivity: the parameters of control system are always changing with change in surrounding conditions, internal disturbance or any other parameters. This change can be expressed in terms of sensitivity. Any control system should be insensitive to such parameters but sensitive to input signals only.

Noise: An undesired input signal is known as noise. A good control system should be able to reduce the noise effect for better performance.

Requirement of good control system

Stability: It is an important characteristic of control system. For the bounded input signal, the output must be bounded and if input is zero then output must be zero then such a control system is said to be stable system.

Bandwidth: An operating frequency range decides the bandwidth of control system. Bandwidth should be large as possible for frequency response of good control system.

Speed: It is the time taken by control system to achieve its stable output. A good control system possesses high speed. The transient period for such system is very small.

Oscillation: A small number of oscillation or constant oscillation of output tend to system to be stable.

Classification of Control System

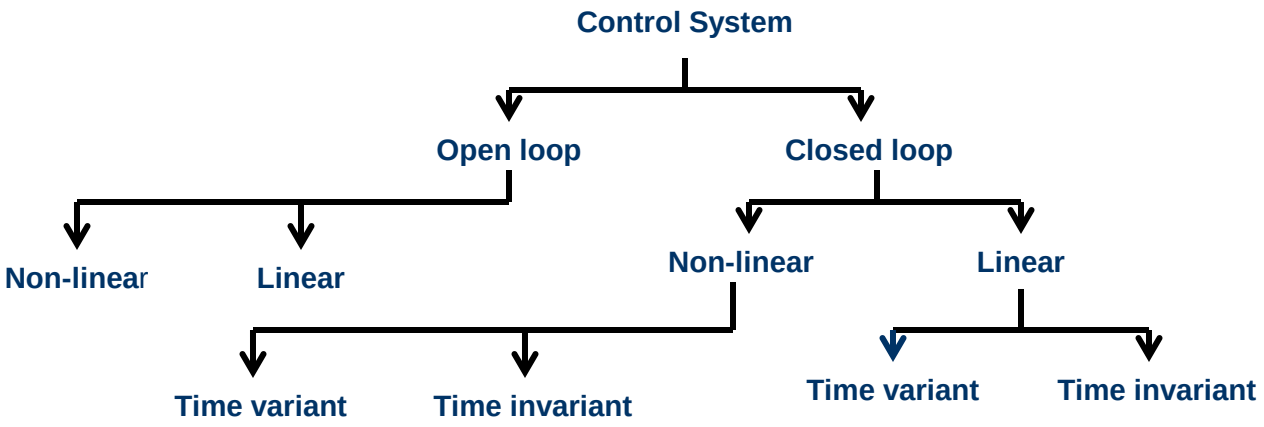

Classification of Control System

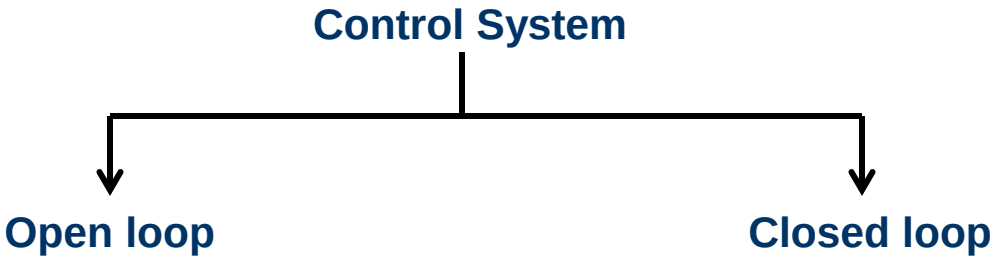

Open Loop Control System

A system in which the control action is totally independent of the output of the system is called “open loop system”.

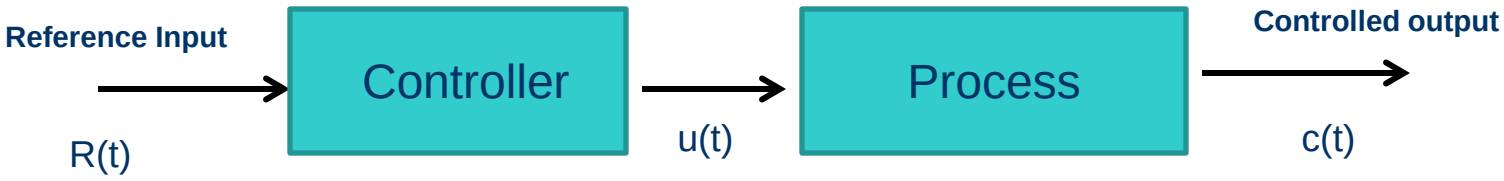

Figure: Block diagram of open loop control system

Examples of Open Loop Control System

Electric hand drier: Hot air (output) comes out as long as you keep your hand under the machine, irrespective of how much your hand is dried.

Automatic Washing machine: This machine runs according to the pre-set time irrespective of washing is completed or not.

Open Loop Control System

Advantages of OLC system:

- Simple in construction and design.
- Economical
- Easy to maintain
- Generally Stable
- Convenient to use as output is difficult to measure.

Disadvantages of OLC System:

- Incorrect and unreliable
- Affected by system parameter variation and external noise
- Any change in output cannot be corrected automatically.

Closed Loop Control (Feedback Control)

Definition: A system in which the control action is dependent on the output is called “close loop control system”.

In close loop system current output is taken into consideration and corrections are made based on feedback. A close loop system is also called feedback control system.

A feedback control system looks at the output and generates the correct input to be fed to the system so that the output behaves in some desired way.

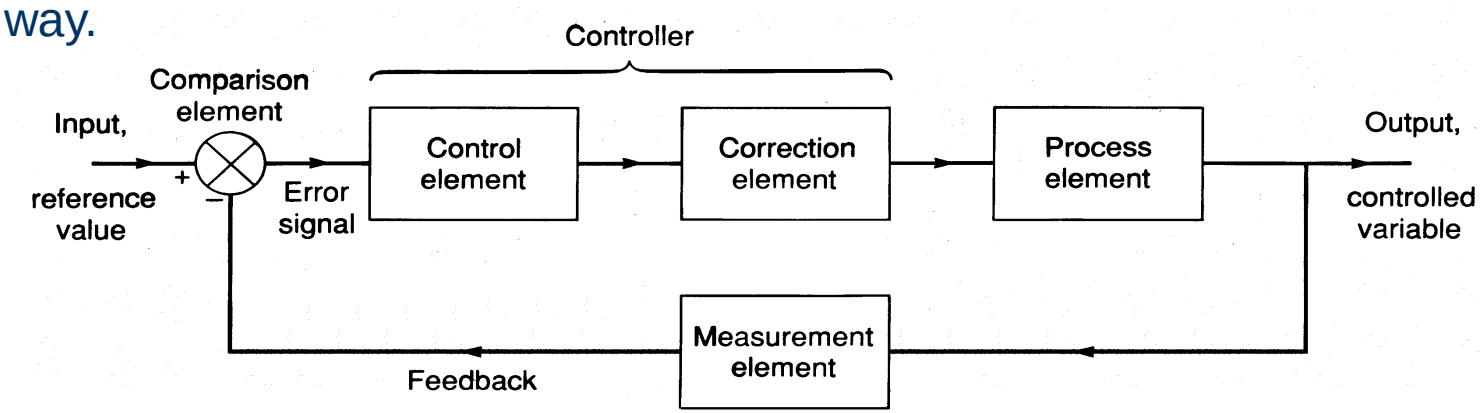

Closed-loop Control System

Example: When driving a car, we look at the speedometer, decide if we are going too fast or slow, and then press either the gas pedal or the brakes in order to reach the speed we want to get to. So the system is the car, the input is the gas (controlled by gas pedal) and the resistance at the wheels (controlled by the brake pedal) and the output is the speed of the car. The driver is acting as the speed control system.

Other examples:

- Automatic electric Iron
- Missile launched and auto tracked by Radar
- Water level controller

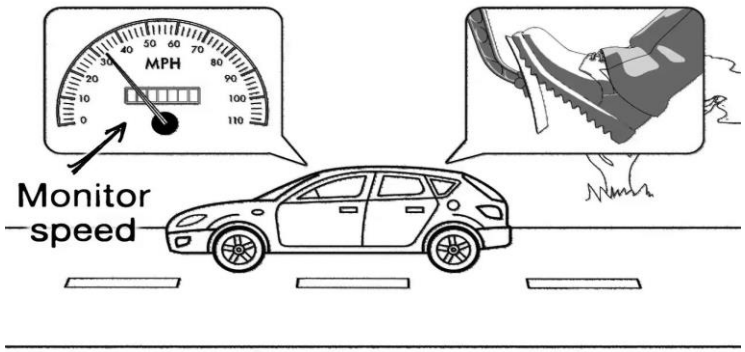

Closed loop Control System

Advantages of CLC System

- Accuracy is high
- Reduced effect of non-linearity
- High Bandwidth
- Facilitates automation
- The sensitivity of system may be made small to make system more stable
- Less affected by noise

Disadvantages of CLC system

- Costly
- Complicated to design
- Required more maintenance
- Reduced the gain with negative feedback
- Stability is the major problem and more care is needed to design a stable CLC system

Comparison between OLC & CLC System

S.NO	Open Loop Control System	Closed Loop Control System
1.	No feedback	Feedback is always present
2.	No error detector	Error detector is present
3.	stable	May become stable
4.	Easy to construct	Complicated to construct
5.	Economical	Costly
6.	Having small bandwidth	Having large bandwidth
7.	It is inaccurate	It is accurate
8.	Less maintenance	More maintenance
9.	Unreliable	Reliable
10.	e.g. Hand drier, Tea maker	Electric Iron, Missile launcher

Classification of Control system

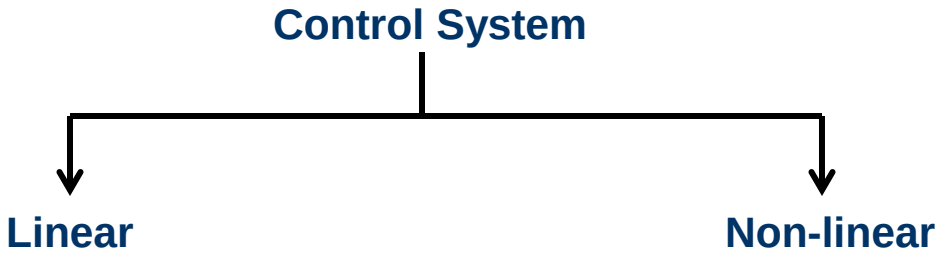

Linear Control System

Definition: A system is said to be linear in terms of the system input x(t) and the system output y(t) if it satisfies the following two properties of superposition and homogeneity.

Superposition:

$x_1(t) \longrightarrow \square \longrightarrow y_1(t)$ $\qquad$ $x_2(t) \longrightarrow \square \longrightarrow y_2(t)$

Then $\quad x_1(t) + x_2(t) \longrightarrow \square \longrightarrow y_1(t) + y_2(t)$

Homogeneity:

$x_1(t) \longrightarrow \square \longrightarrow y_1(t) \Rightarrow ax_1(t) \longrightarrow \square \longrightarrow ay_1(t)$

A control system in which output varies linearly with the input is called a linear control system.

$u(t) \longrightarrow \boxed{\text{Process}} \longrightarrow y(t)$

Non-linear Control System

- Non-linear systems do not obey law of superposition.
- The stability of non-linear systems depend on root location as well as initial conditions & type of input.
- Non-linear systems exhibit self sustained oscillations of fixed frequency.

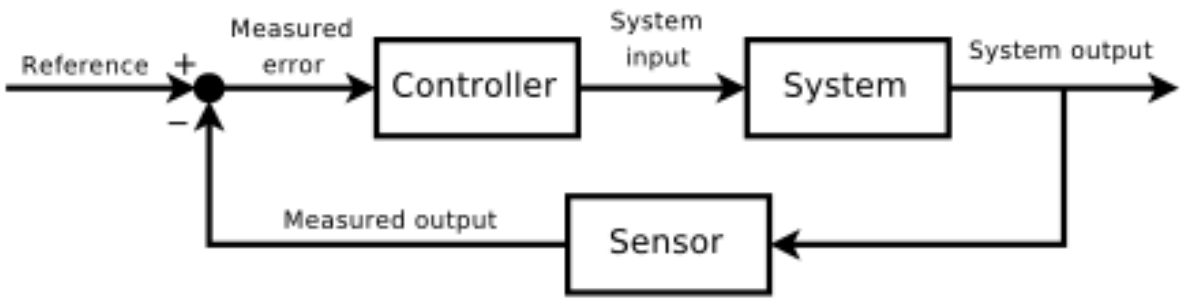

Difference between Linear & Non-linear Control System

S.No	Linear System	Non-linear System
1.	Obey superposition & homogeneity	Do not obey superposition & homogeneity
2.	Can be analysed by standard test signals	Can not be analysed by standard test signals
3.	Stability depends only on root location	Stability depends on root location, initial conditions & type of input
4.	Do not exhibit limit cycles	Exhibit limit cycles
5.	Do not exhibit jump resonance	Exhibit jump resonance
6.	Can be analysed by Laplace transform, z-transform	Can not be analysed by Laplace transform, z-transform

Classification of Control system

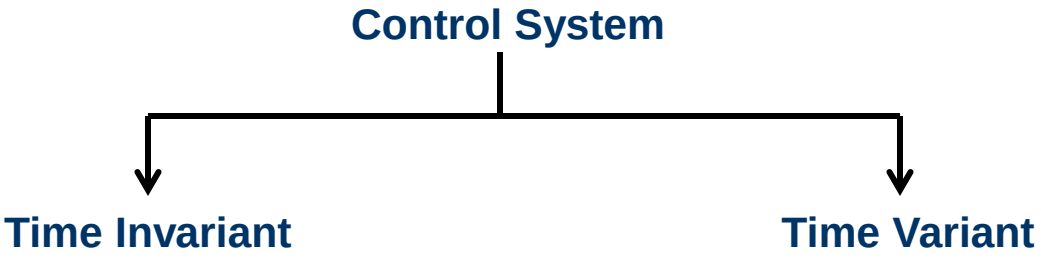

Time invariant vs Time variant Control System

Time invariant	Time variant
A time invariant system simply means the behavior of the system is independent of the time you choose to start `running' the system, given the same initial condition and input profile. If input u(t) generates output y(t), then if you fed in the input w(t) = u(t-T) instead (this is like a delayed input) , you get an output h(t) with the property that h(t) = y(t-T).	Time Variant System are systems where the system itself changes over time. This change is reflected in the differential equation for the system as a parameter that is varies over time. For example: As the rocket burns tremendous amount of fuel the mass reduces quickly over short periods of time. This is an example of a time varying system..

Difference between Time variant & Time invariant Control System

To demonstrate how to determine if a system is time-invariant, consider the two systems:

System A: $y(t)= t\,x(t)$ **System B**: $y(t)=10x(t)$

Since system A explicitly depends on *t* outside of x(t) and y(t), so it is time variant. System B, however, does not depend explicitly on *t* so it is time-invariant.

System A:

Start with a delay of the input $x_d(t) = x(t + k)$

$\Longrightarrow$ $y(t) = t\,x(t)$ $\Longrightarrow$ $y_1(t) = t\,x_d(t) = t\,x(t + k)$

Now delay the output by "k"

$y(t) = t\,x(t)$ $\Longrightarrow$ $y_2(t) = y(t + k) = (t + k)(x(t + k))$

Hence $y_1(t) \neq y_2(t)$ Therefore the system is Time variant.

System B:

Start with a delay of the input $x_d(t) = x(t + k)$

$y(t) = 10x(t)$ $\Longrightarrow$ $y_1(t) = 10x_d(t) = 10x(t + k)$

Now delay the output by "k"

$y(t) = 10x(t)$ $\Longrightarrow$ $y_2(t) = y(t + k) = 10x(t + k)$

Hence $y_1(t) = y_2(t)$ Therefore the system is time invariant

Laplace Transform

Why Laplace is important?

- In order to compute the time response of a dynamic system, it is necessary to solve the differential equations (system mathematical model) for given input. Laplace transform converts the problem from the time domain to the Laplace domain. i.e. converts the differential equation into an algebraic equation in “s”.
- To evaluate the performance of an automatic control system commonly used mathematical tool is “Laplace Transform”.
- Laplace Transform exist for almost all signals of practical interest.

Laplace Transform & In

Laplace Transform: It transform a t
domain function F(s), where "s" i
s=a+ib. The Laplace transform o

$$L[f(t)] = \int_0^\infty f(t)$$

Inverse Laplace transform: Inverse
using partial fraction to break dov
components and then use Laplac

$$f(t) = L^{-1}[F(s)]$$

Derivatives: The Laplace transform

$$\frac{d^n}{dt^n} f(t) = s^n F(s) - s^{n-}$$

(i) Factored roots

$$\frac{K}{s(s+a)} = \frac{A}{s} + \frac{B}{(s+a)}$$

(ii) Repeated roots

$$\frac{K}{s^2(s+a)} = \frac{A}{s} + \frac{B}{s^2} + \frac{C}{(s+a)}$$

(iii) Second-order real roots ($b^2 > 4ac$)

$$\frac{K}{s(as^2+bs+c)} = \frac{K}{s(s+d)(s+e)} = \frac{A}{s} + \frac{B}{(s+d)} + \frac{C}{(s+e)}$$

(iv) Second-order complex roots ($b^2 < 4ac$)

$$\frac{K}{s(as^2+bs+c)} = \frac{A}{s} + \frac{Bs+C}{as^2+bs+c}$$

Completing the square gives

$$\frac{A}{s} + \frac{Bs+C}{(s+\alpha)^2+\omega^2}$$

Where f(t) and its derivatives at t=0 are the initial conditions.

Laplace Transform

Example: Find Laplace transform for f(t) = 1 and f(t) = e^{-at}

1. $$L[f(t)] = \int_0^\infty 1e^{-st}dt = [-\frac{1}{s}(e^{-st})]_0^\infty$$
$$= [-\frac{1}{s}(0-1)] = \frac{1}{s} = F(s)$$

2. $$L[f(t)] = \int_0^\infty e^{-at}e^{-st}dt = \int_0^\infty e^{-(s+a)t}dt$$
$$= [-\frac{1}{s+a}(e^{-(s+a)t})]_0^\infty$$
$$= [-\frac{1}{s+a}(0-1)] = \frac{1}{s+a} = F(s)$$

Common Laplace Transform Pairs

$f(t)$	$F(s) = L[f(t)]$
1 or $u(t)$	$\frac{1}{s}$
$e^{-\alpha t}$	$\frac{1}{s+\alpha}$
$\sin \omega t$	$\frac{\omega}{s^2+\omega^2}$
$\cos \omega t$	$\frac{s}{s^2+\omega^2}$
$e^{-\alpha t} \sin \omega t$	$\frac{\omega}{(s+\alpha)^2+\omega^2}$
$e^{-\alpha t} \cos \omega t$	$\frac{s+\alpha}{(s+\alpha)^2+\omega^2}$
t	$\frac{1}{s^2}$
t^n	$\frac{n!}{s^{n+1}}$
$e^{-\alpha t} t^n$	$\frac{n!}{(s+\alpha)^{n+1}}$
$\delta(t)$	1

*Use when roots are complex.

Inverse Laplace Transform

Example: Find Laplace inverse transform for:

$$\frac{3s+2}{s(s+1)}$$

Solution

$$\frac{3s+2}{s(s+1)} = \frac{A}{s} + \frac{B}{s+1}$$

$$3s+2 = A(s+1) + Bs$$

$$3s+2 = (A+B)s + A$$

$$A = 2$$

$$(2+B) = 3$$

$$B = 1$$

$$\mathcal{L}^{-1}\left[\frac{2}{s} + \frac{1}{s+1}\right] = 2 + e^{-t}$$

Derivative Laplace Transform

Example: Find the Laplace transform of the following differential equation given: $\frac{d^2x_o}{dt^2} + 3\frac{dx_o}{dt} + 2x_o = 5$

(a) Initial conditions $x_o = 4$, $\frac{dx_0}{dt} = 3$

Solution

(a) **Initial conditions** $x_o = 4$, $\frac{dx_0}{dt} = 3$

$$(s^2X_o(s) - 4s - 3) + 3(sX_o(s) - 4) + 2X_o(s) = \frac{5}{s}$$

$$s^2X_o(s) + 3sX_o(s) + 2X_o(s) = \frac{5}{s} + 4s + 3 + 12$$

$$(s^2 + 3s + 2)X_o(s) = \frac{5 + 4s^2 + 15s}{s}$$

$$X_o(s) = \frac{4s^2 + 15s + 5}{s(s^2 + 3s + 2)}$$

Transfer Function

Definition: The ratio of Laplace transform of the output to the Laplace transform of the input assuming all initial conditions to be zero is defined as "**Transfer Function".**

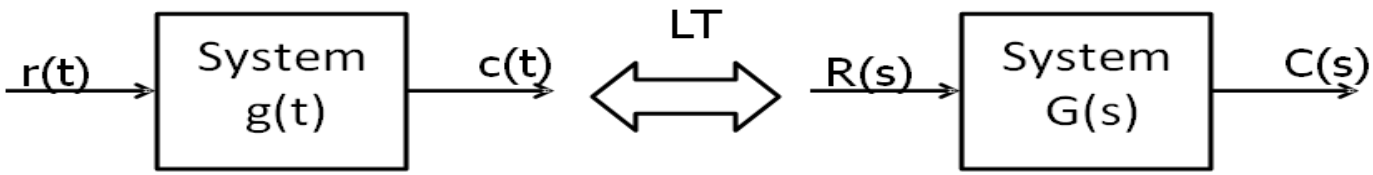

For the system shown,

c(t)= output
r(t)= input
g(t)= System function

L{c(t)}= C(s)
L{r(t)}= R(s)
L{g(t)}= G(s)

Therefore transfer function G(s) for above system is given by,

$$G(s) = \frac{\text{Laplace of output}}{\text{Laplace of input}} = \frac{C(s)}{R(s)}$$

Transfer Function of Close Loop System

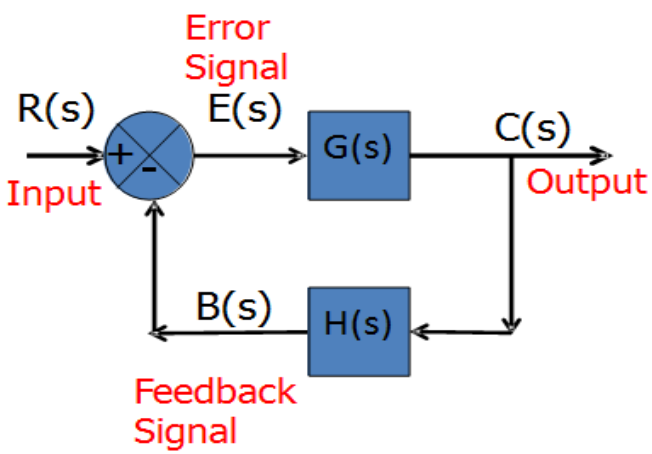

Error signal is given by;

$$E(s) = R(s) - B(s) ------(1)$$

$$\therefore R(s) = E(s) + B(s)$$

Gain of feedback network is given by;

$$H(s) = \frac{B(s)}{C(s)}$$

$$\therefore B(s) = H(s).C(s) ------(2)$$

Gain for CL system is given by;

$$G(s) = \frac{C(s)}{E(s)}$$

$$\therefore C(s) = G(s).E(s) ------(3)$$

Substitute value of E(s) from eq. 1 to 3

$$C(s) = G(s).(R(s) - B(s))$$

$$\therefore C(s) = G(s).R(s) - G(s).B(s) ------(4)$$

Substitute value of B(s) from eq. 2 to 4

$$C(s) = G(s)R(s) - G(s).H(s).C(s)$$

$$G(s).R(s) = C(s) + G(s).H(s).C(s)$$

$$G(s).R(s) = C(s)(1 + G(s).H(s))$$

Transfer function is given by;

$$T.F. = \frac{C(s)}{R(s)} = \frac{G(s)}{1 + G(s).H(s)}$$

Methods to obtain Transfer Function

Block Diagram Method: It is a pictorial representation of the cause and effect relationship between input and output of a physical system.

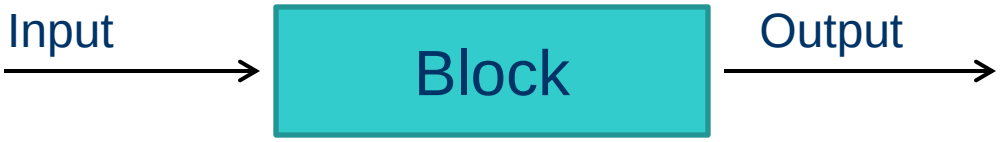

- If the system is simple & has limited parameters then it is easy to analyse such system using the method discussed earlier. i.e. "**Transfer Function**"
- If the system is complicated and also have number of parameters then it is very difficult to analyse it.
- To overcome this problem block diagram method is used. It is a simple way to represent any practically complicated system. In this each component of the system is represented by a separate block known as functional block.

Block Diagram Fundamentals

Output: The value of the input is multiplied to the value of block gain to get the output.

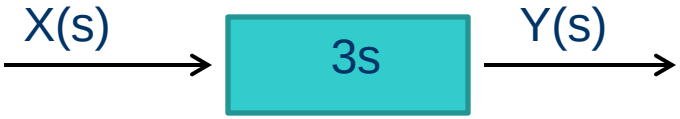

So output is

$$Y(s)= 3s.X(s)$$

Summing Point: A circle with a cross is the symbol of summing operation. The plus or minus sign at each arowhead indicates whether that signal is to be added or subtracted. Two or more signals can be added or subtracted at summing point.

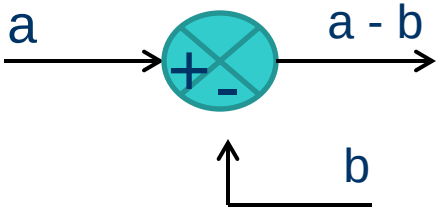

Output= a - b

Block Diagram Fundamentals

Take off point: The output signal can be applied to two or more points from a take off point.

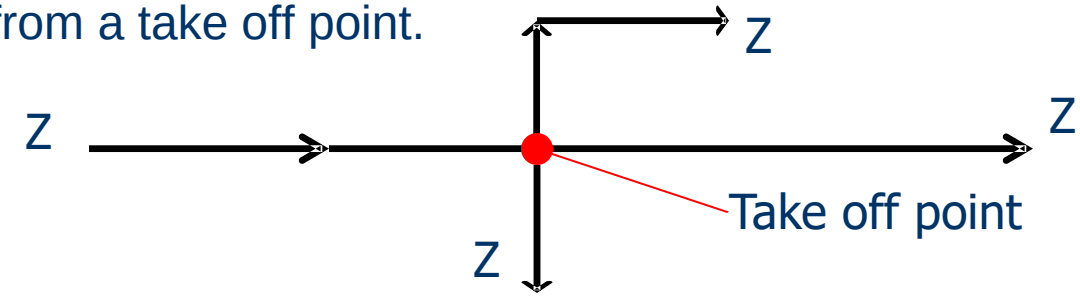

Forward path: The direction of flow of signal is from input to output.

Feedback path: The direction of flow of signal is from output to input.

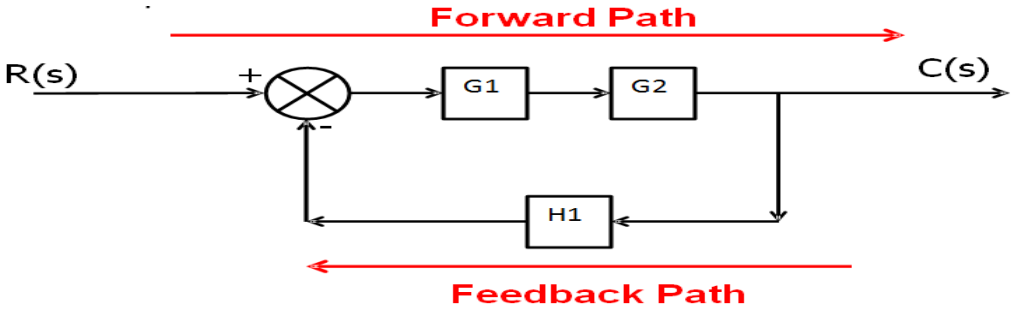

Block Diagram Reduction Rules

Rule 1: For blocks in cascade

Gain of blocks connected in cascade gets multiplied with each other.

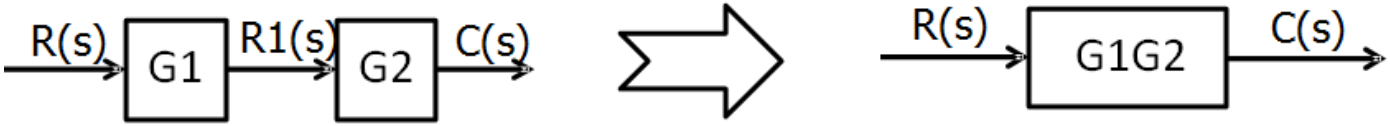

R1(s)=G1.R(s) and C(s)=G2.R1(s) C(s)=G1G2R(s)

So C(s)=G1G2R(s)

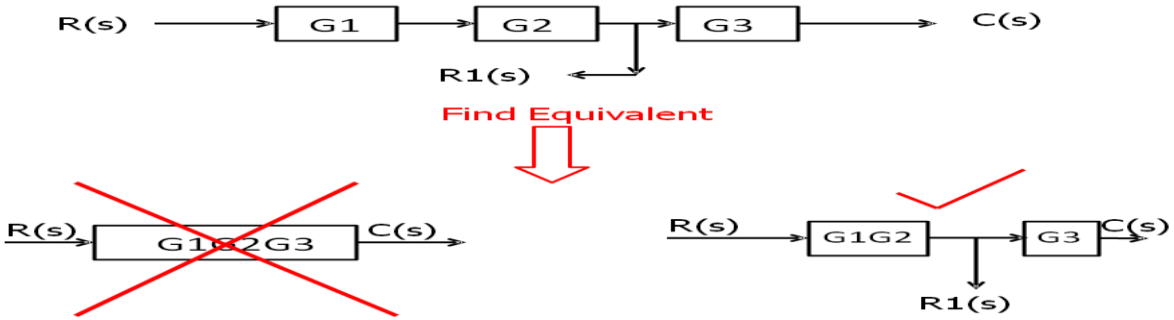

Block Diagram Reduction Rules

Rule 2: For blocks in Parallel

Gain of blocks connected in parallel gets added algebraically.

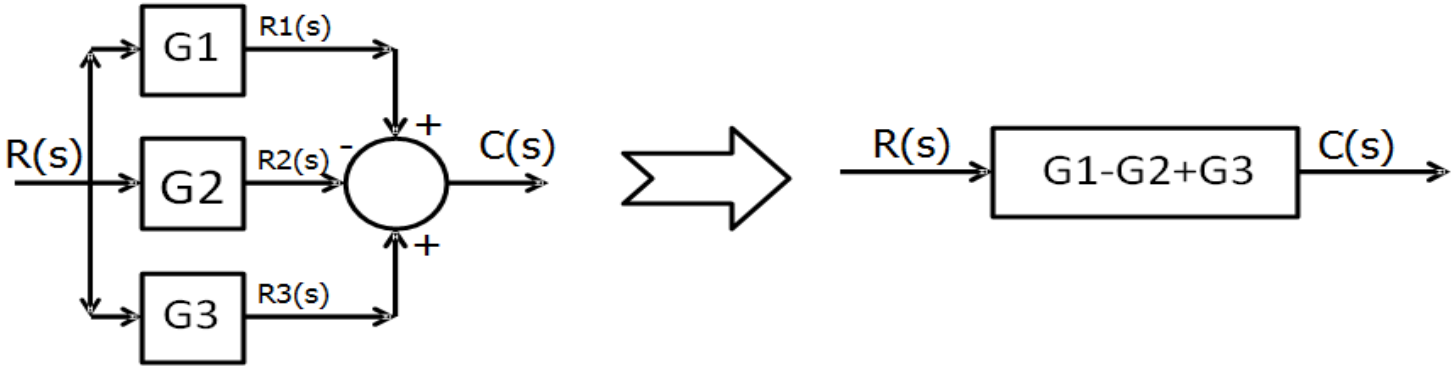

C(s)= R1(s)-R2(s)+R3(s)
= G1R(s)-G2R(s)+G3R(s)
C(s)=(G1-G2+G3) R(s)

C(s)= (G1-G2+G3) R(s)

Block Diagram Reduction Rules

Rule 3: Eliminate Feedback Loop

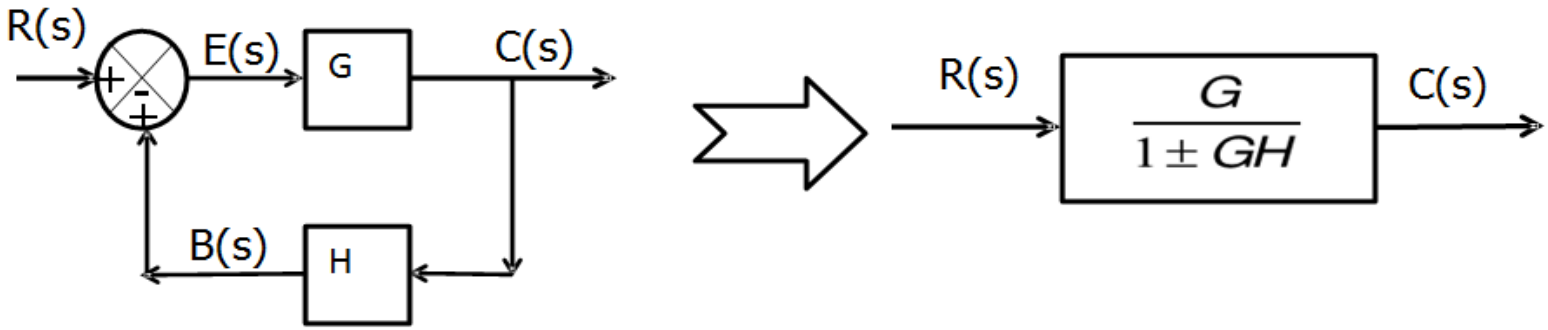

$$\frac{C(s)}{R(s)} = \frac{G}{1 \pm GH}$$

In General

Block Diagram Reduction Rules

From shown figure

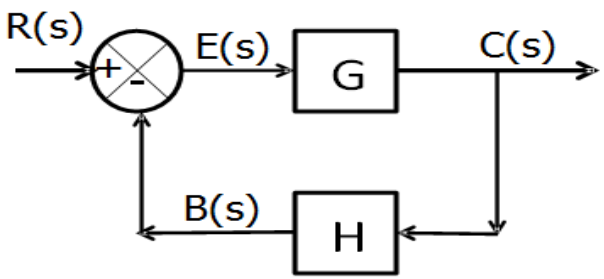

$$E(s) = R(s) - B(s)$$

and

$$C(s) = G.E(s)$$
$$= G[R(s) - B(s)]$$
$$= GR(s) - GB(s)$$

But

$$B(s) = H.C(s)$$

$$\therefore C(s) = G.R(s) - G.H.C(s)$$

$$C(s) + G.H = GR(s)$$

$$\therefore C(s)\{1 + G.H\} = G.R(s)$$

For Negative Feedback

$$\therefore \frac{C(s)}{R(s)} = \frac{G}{1 + GH}$$

Block Diagram Reduction Rules

From shown figure

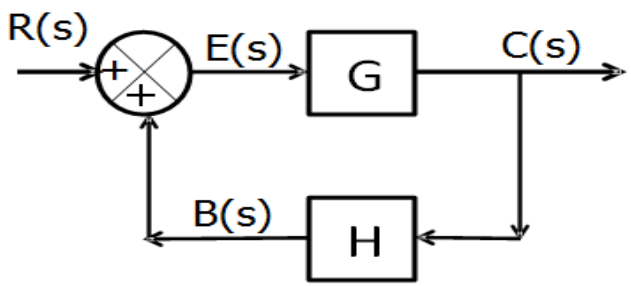

$$E(s) = R(s) + B(s)$$

and

$$C(s) = G.E(s)$$

$$= G[R(s) + B(s)]$$

$$= GR(s) + GB(s)$$

But

$$B(s) = H.C(s)$$

$$\therefore C(s) = G.R(s) + G.H.C(s)$$

$$C(s) - G.H = GR(s)$$

$$\therefore C(s)\{1 - G.H\} = G.R(s)$$

For Positive Feedback

$$\therefore \frac{C(s)}{R(s)} = \frac{G}{1 - GH}$$

Block Diagram Reduction Rules

Rule 4: Associative Law for Summing Points

The order of summing points can be changed if two or more summing points are in series

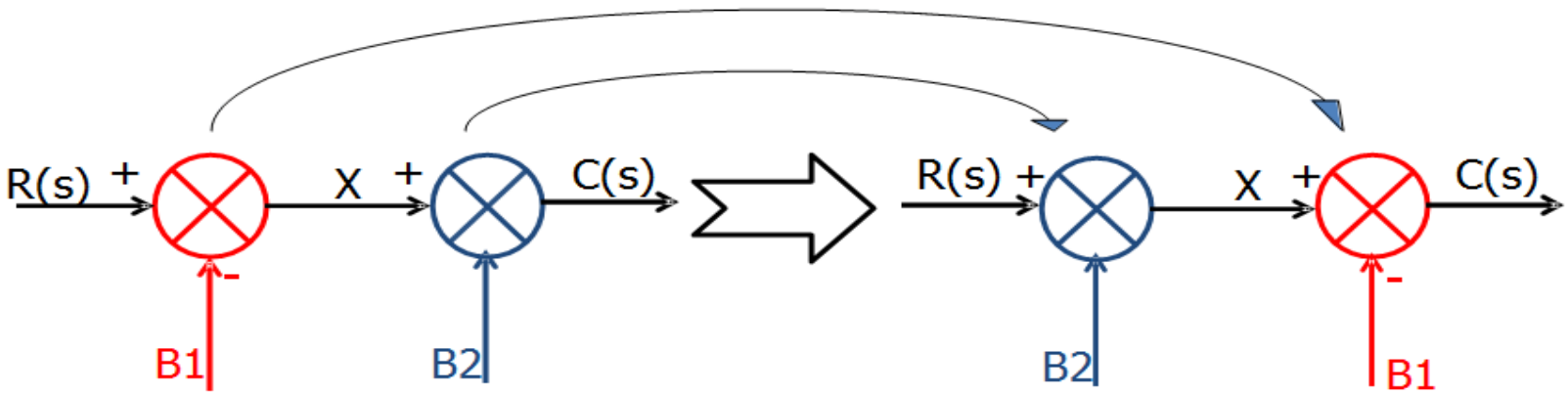

X=R(s)-B1
C(s)=X-B2
C(s)=R(s)-B1-B2

X=R(s)-B2
C(s)=X-B1
C(s)=R(s)-B2-B1

Block Diagram Reduction Rules

Rule 5: Shift summing point before block

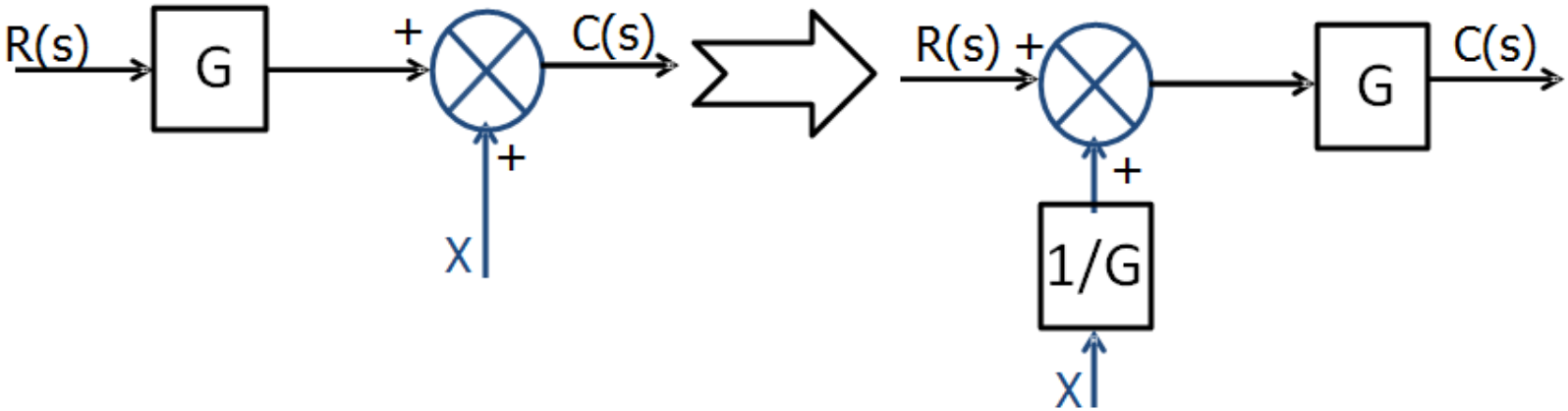

$C(s)=R(s)G+X$

$C(s)=G\{R(s)+X/G\}$
$=GR(s)+X$

Block Diagram Reduction Rules

Rule 6: Shift summing point after block

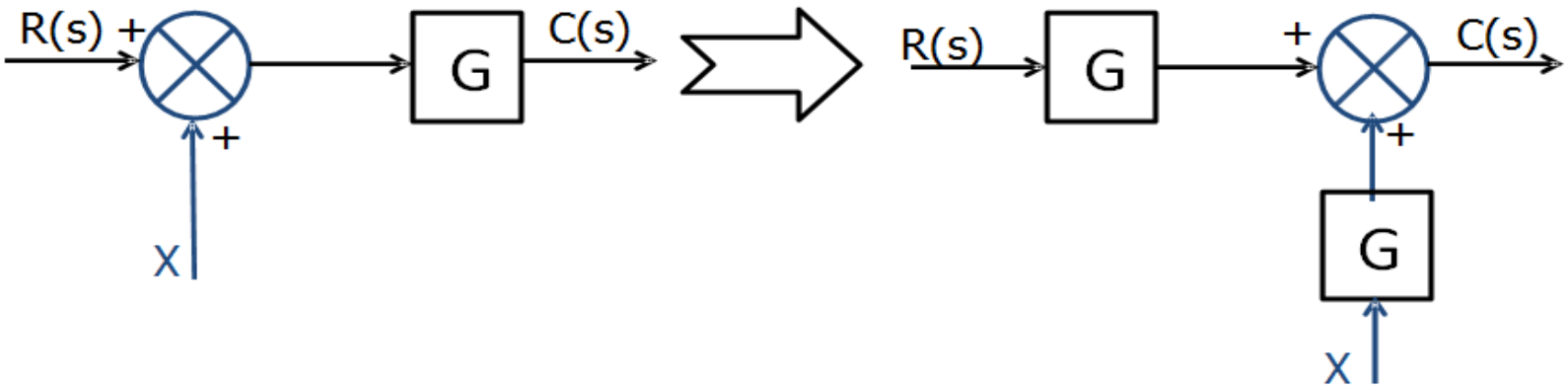

$$C(s)=G\{R(s)+X\}$$
$$=GR(s)+GX$$

$$C(s)=GR(s)+XG$$
$$=GR(s)+XG$$

Block Diagram Reduction Rules

Rule 7: Shift a take off point before block

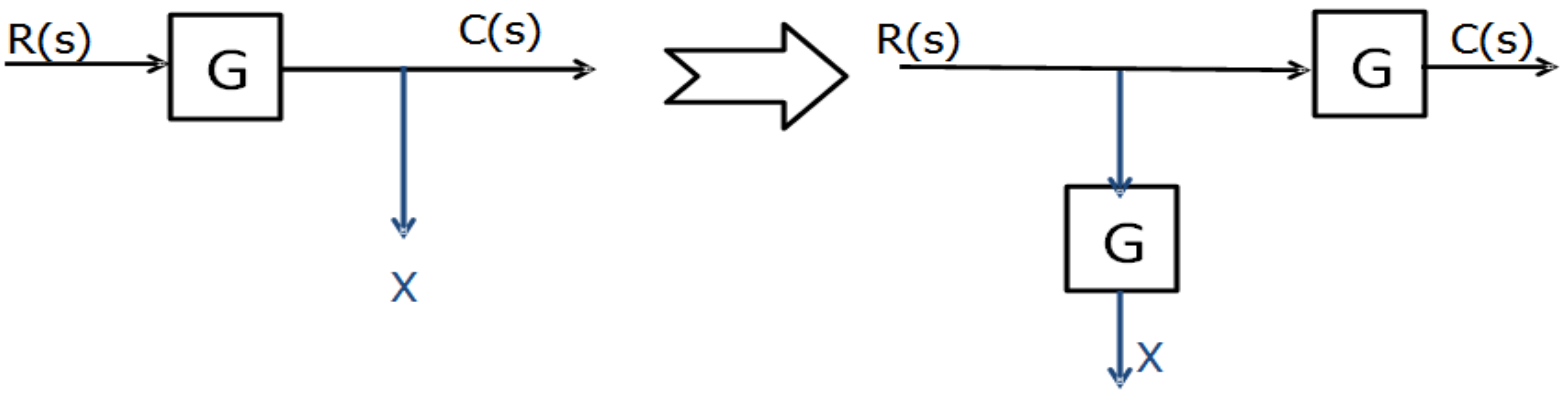

C(s)=GR(s)
and
X=C(s)=GR(s)

C(s)=GR(s)
and
X=GR(s)

Block Diagram Reduction Rules

Rule 8: Shift a take off point after block

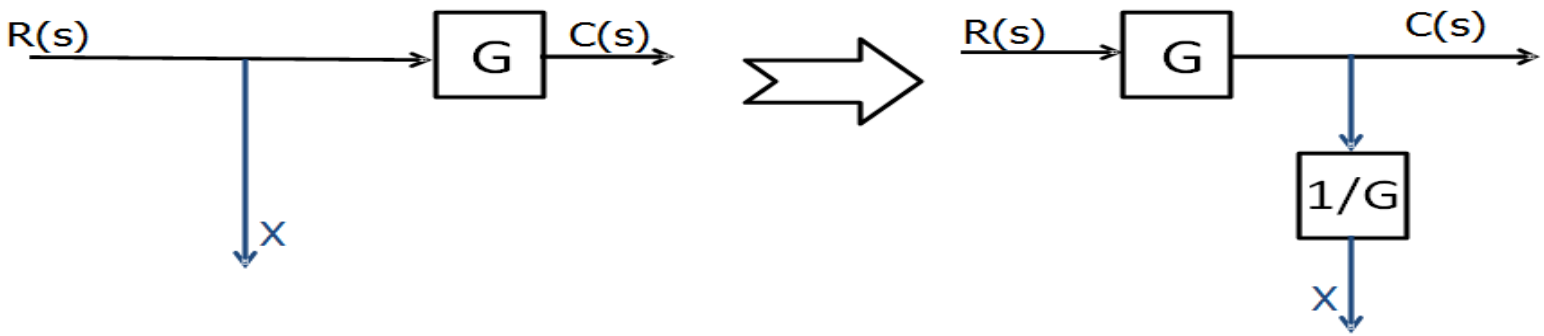

C(s)=GR(s)
and
X=R(s)

C(s)=GR(s)
and
X=C(s).{1/G}
=GR(s).{1/G}
= R(s)

Block Diagram Reduction Rules

- While solving block diagram for getting single block equivalent, the said rules need to be applied. After each simplification a decision needs to be taken. For each decision we suggest preferences as:

First choice

First preference:	Rule 1 (For series)
Second preference:	Rule 2 (For parallel)
Third preference:	Rule 3 (For FB loop)

Second choice (Equal preference)

Rule 4	(Adjusting summing order)
Rule 5/6	(Shifting summing point before/after block)
Rule 7/8	(Shifting take off point before/after block)

Example 1

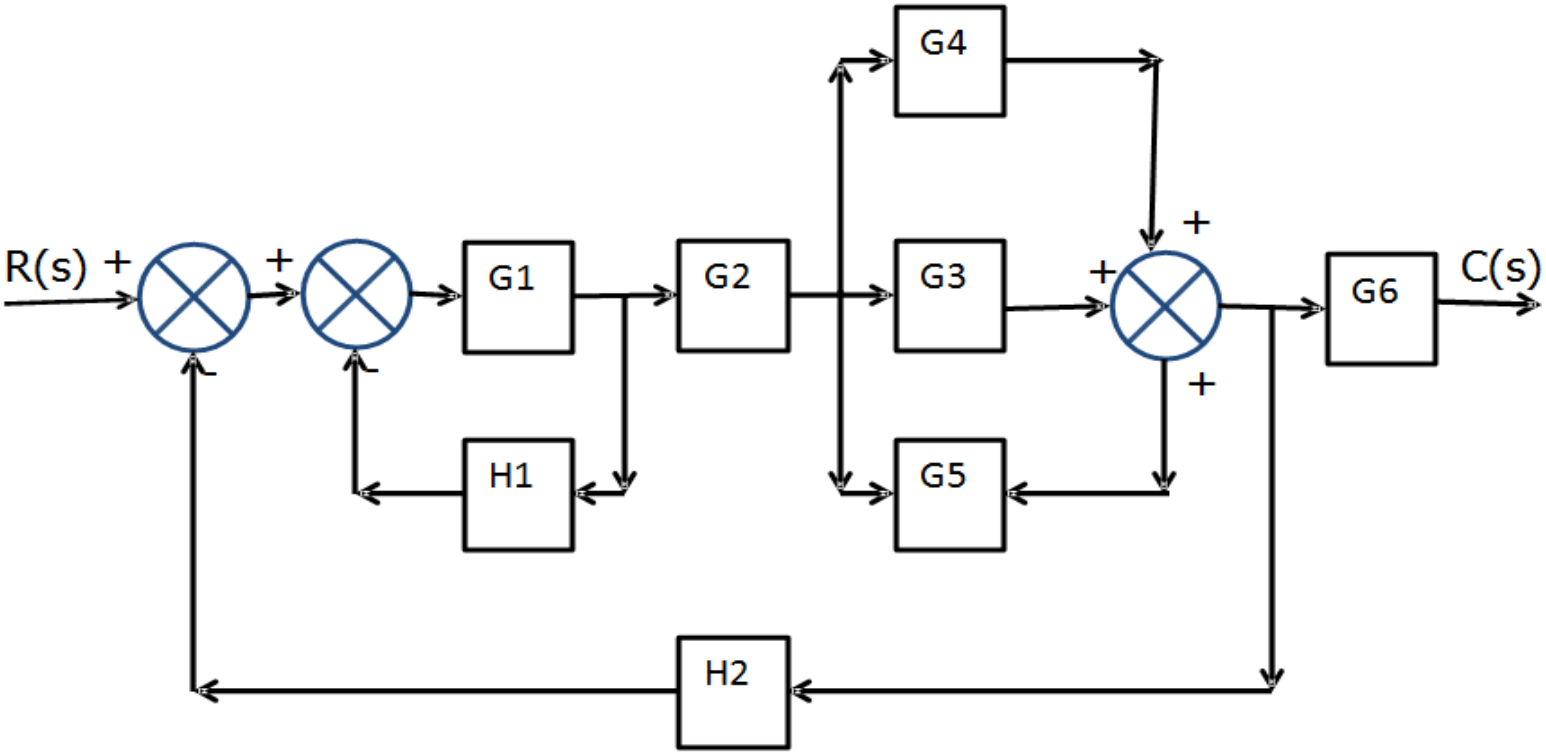

Example 1 (Continuous)

Apply Rule 2: Blocks in parallel

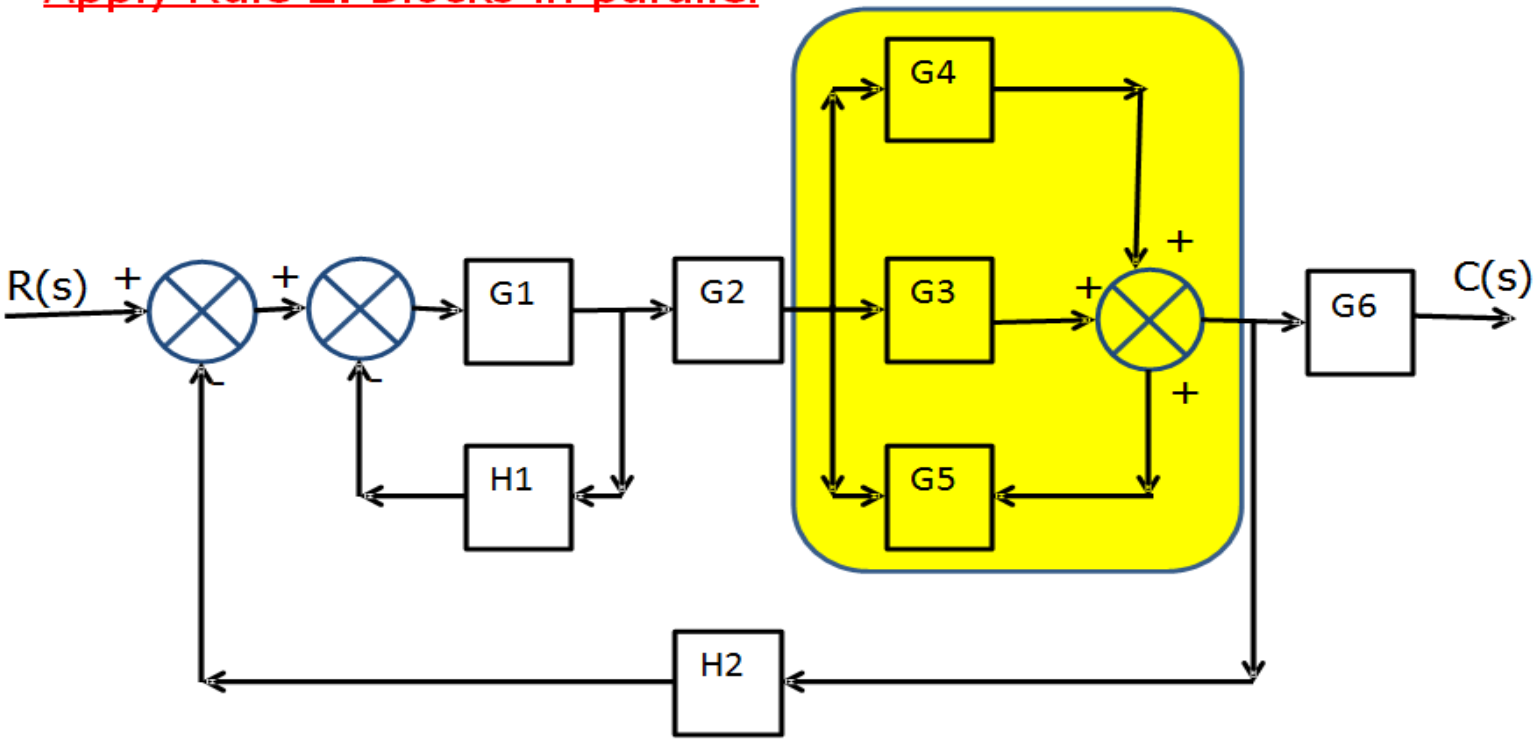

Example 1 (Continuous)

Apply Rule 1: Blocks in series

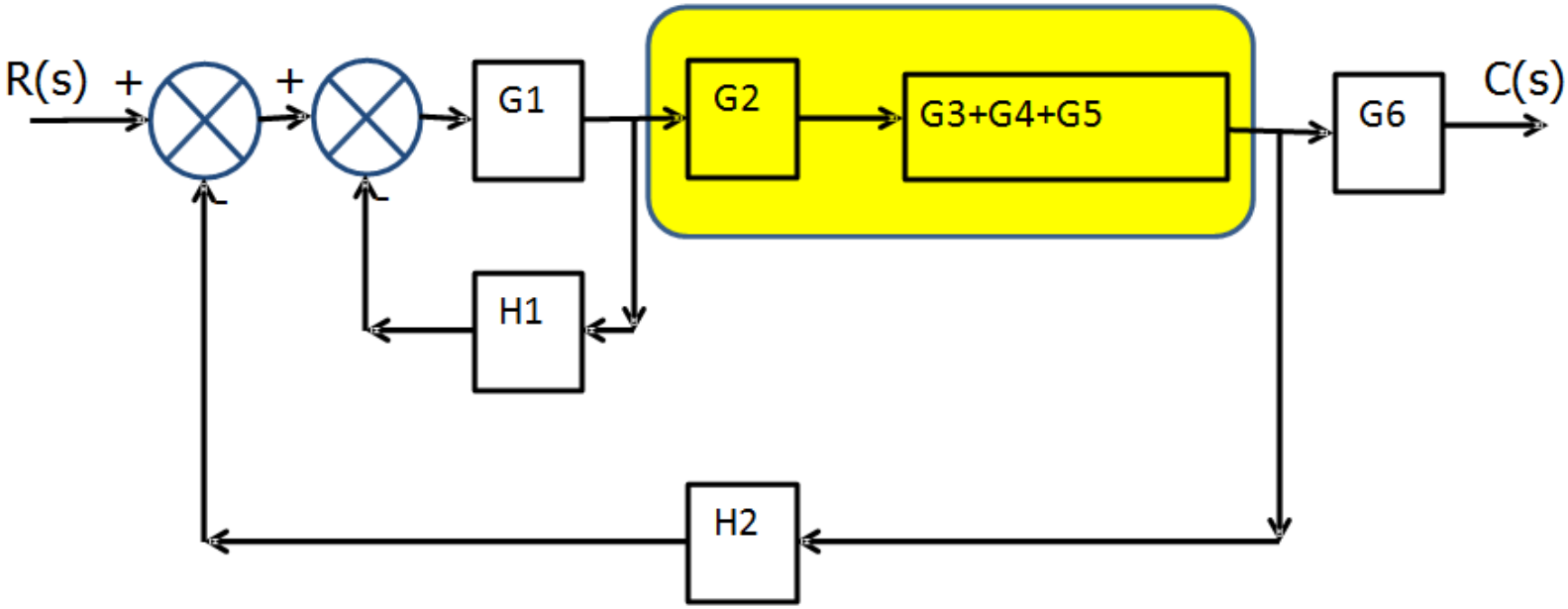

Example 1 (Continuous)

Apply Rule 3: Elimination of feedback loop

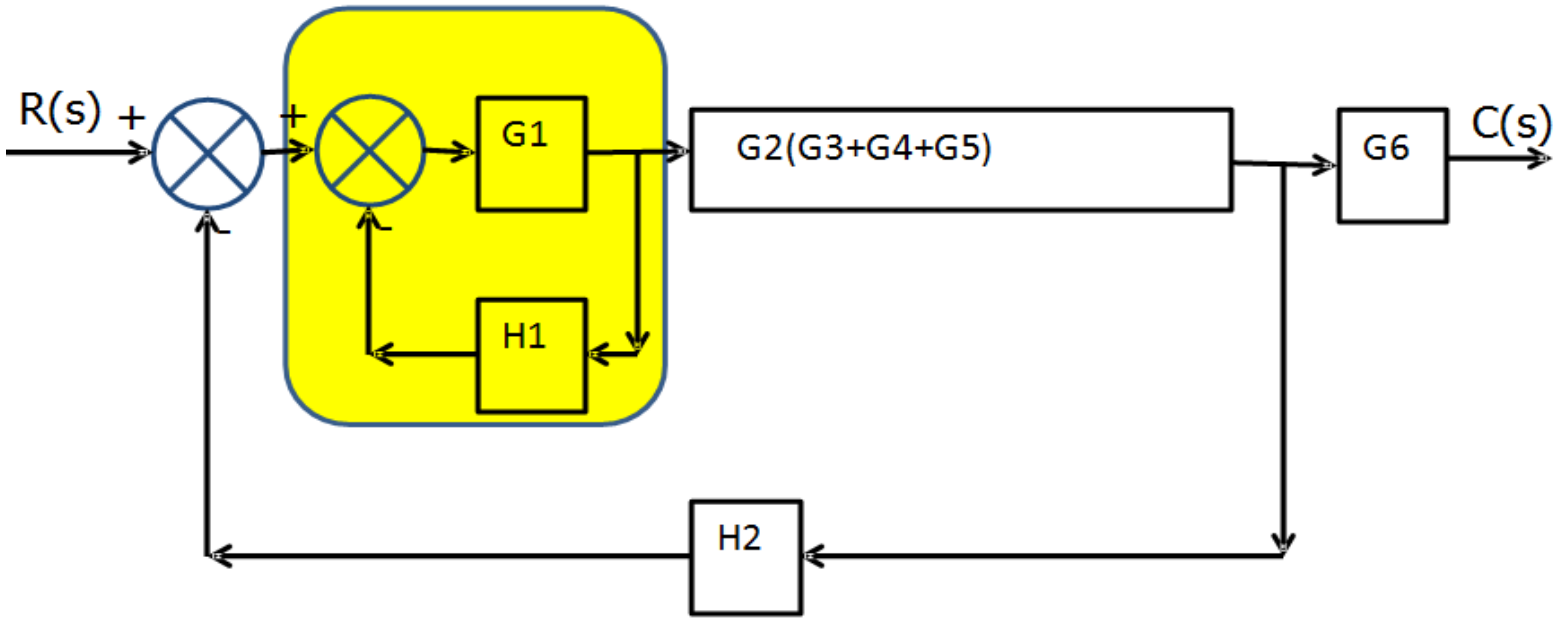

Example 1 (Continuous)

Apply Rule 1: Blocks in series

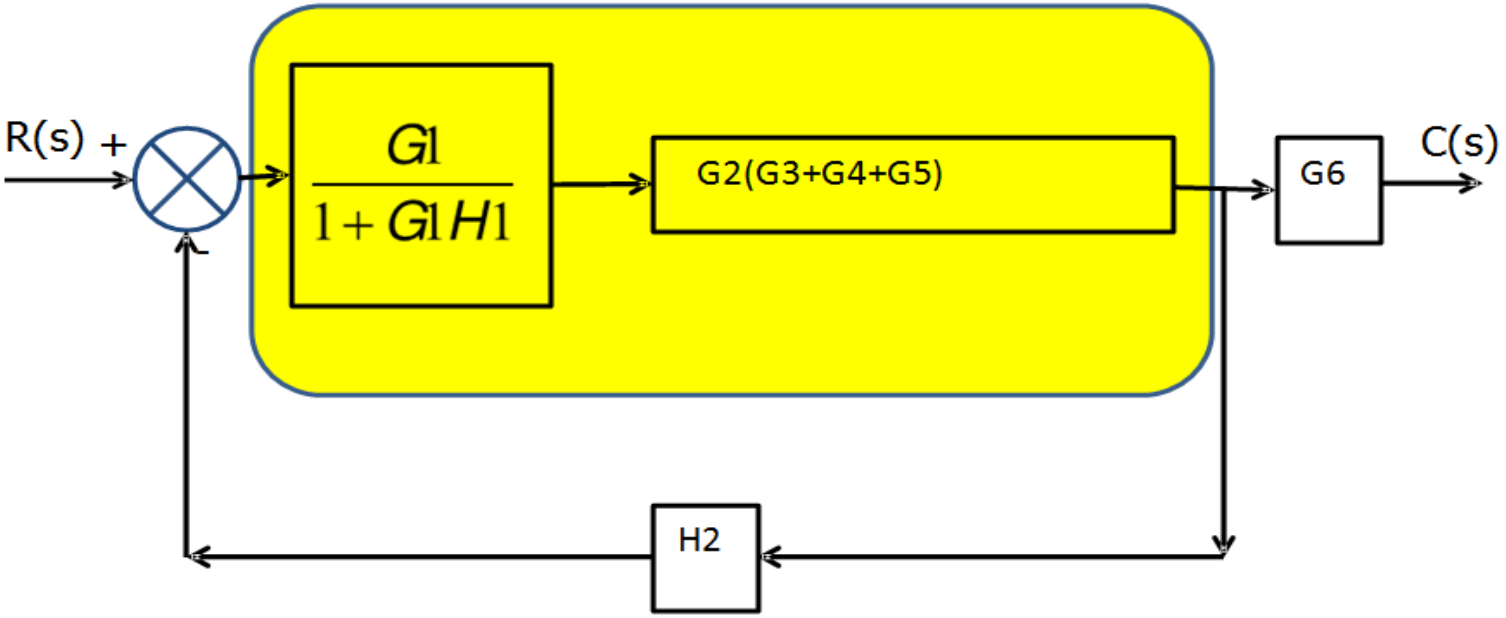

Example 1 (Continuous)

Apply Rule 3: Elimination of feedback loop

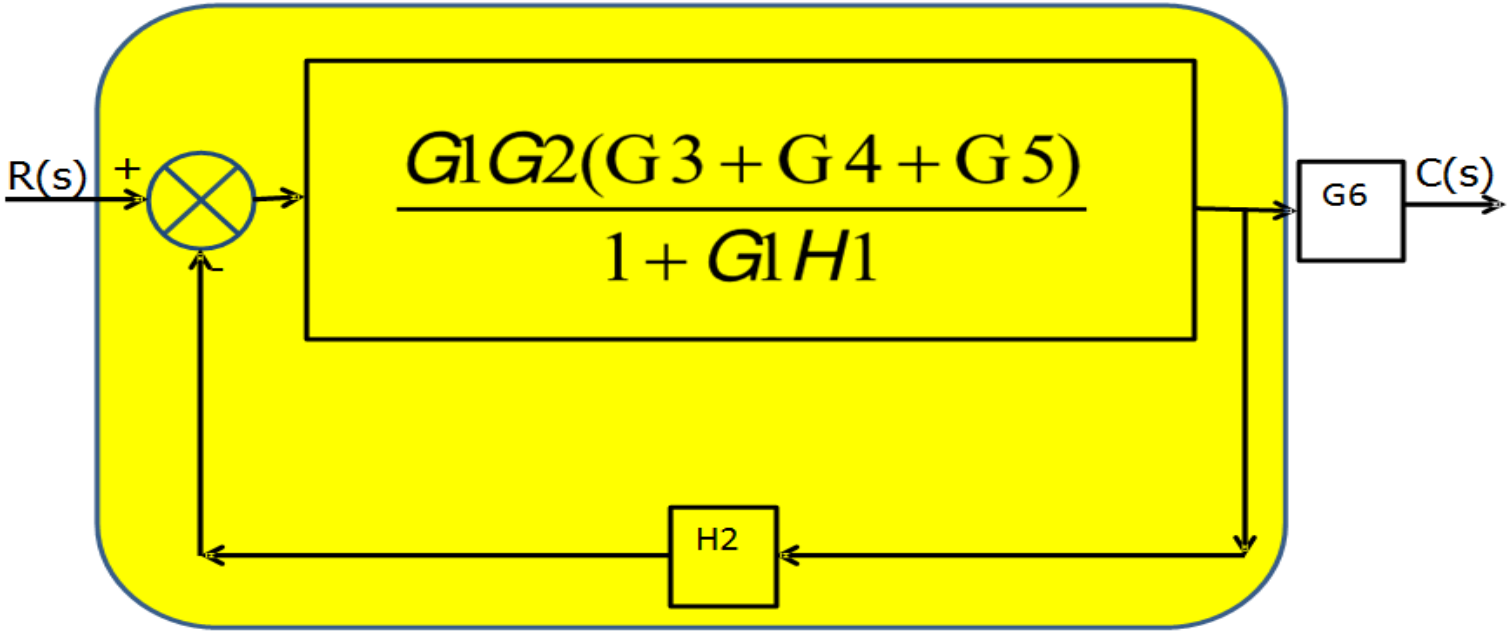

Example 1 (Continuous)

Apply Rule 1: Blocks in series

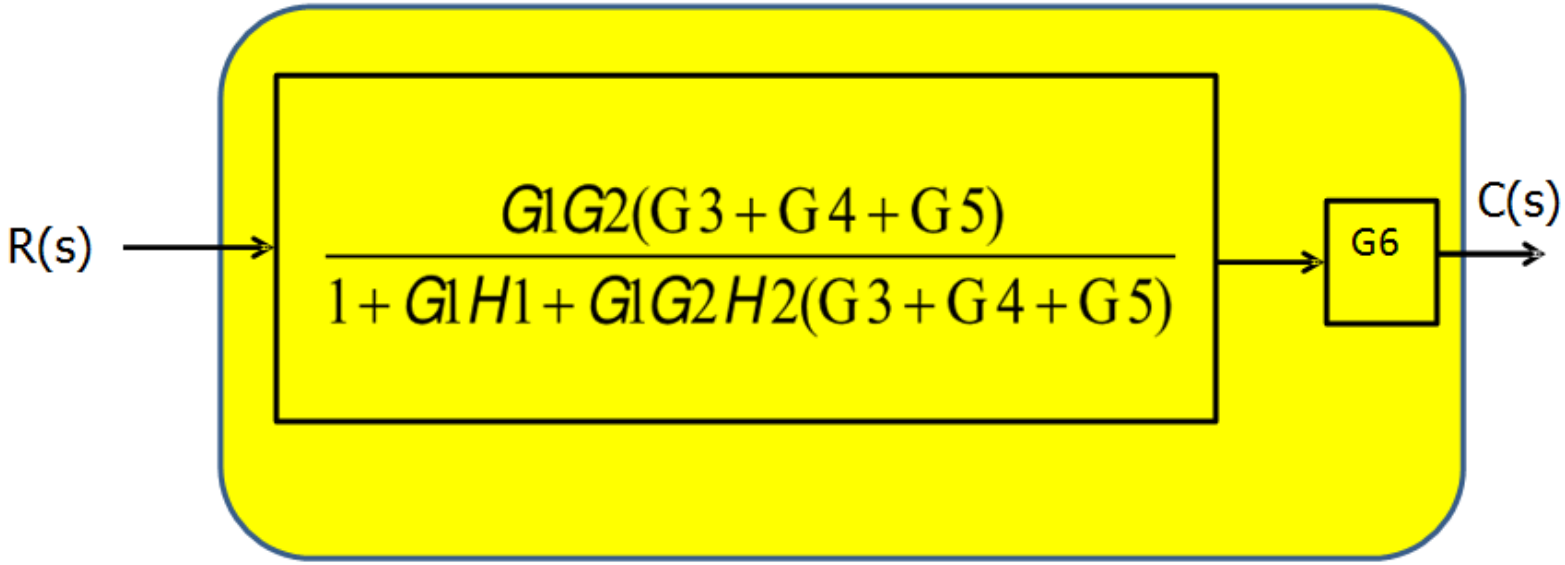

Example 1 (Finished)

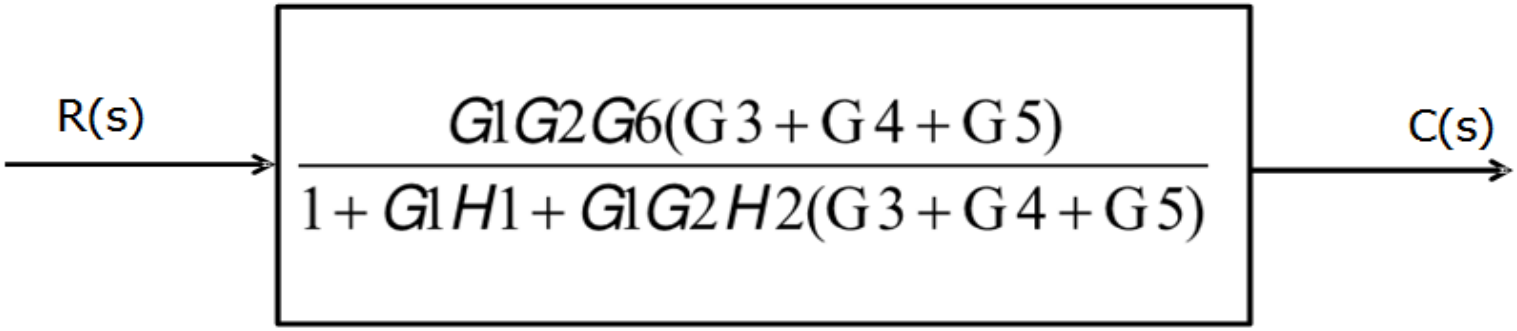

$$\frac{C(s)}{R(s)} = \frac{G1G2G6(G3+G4+G5)}{1+G1H1+G1G2H2(G3+G4+G5)}$$

Example 2

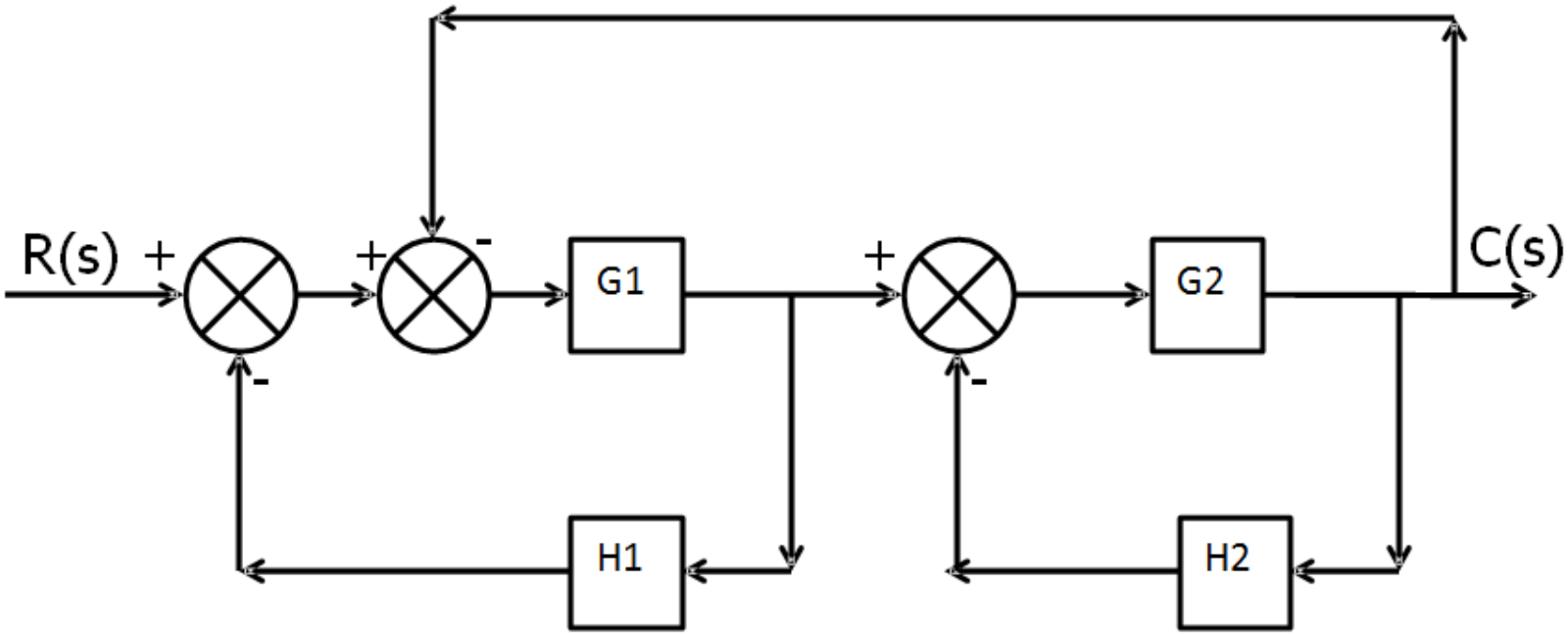

Example 2

Apply Rule 3: Elimination of feedback loop

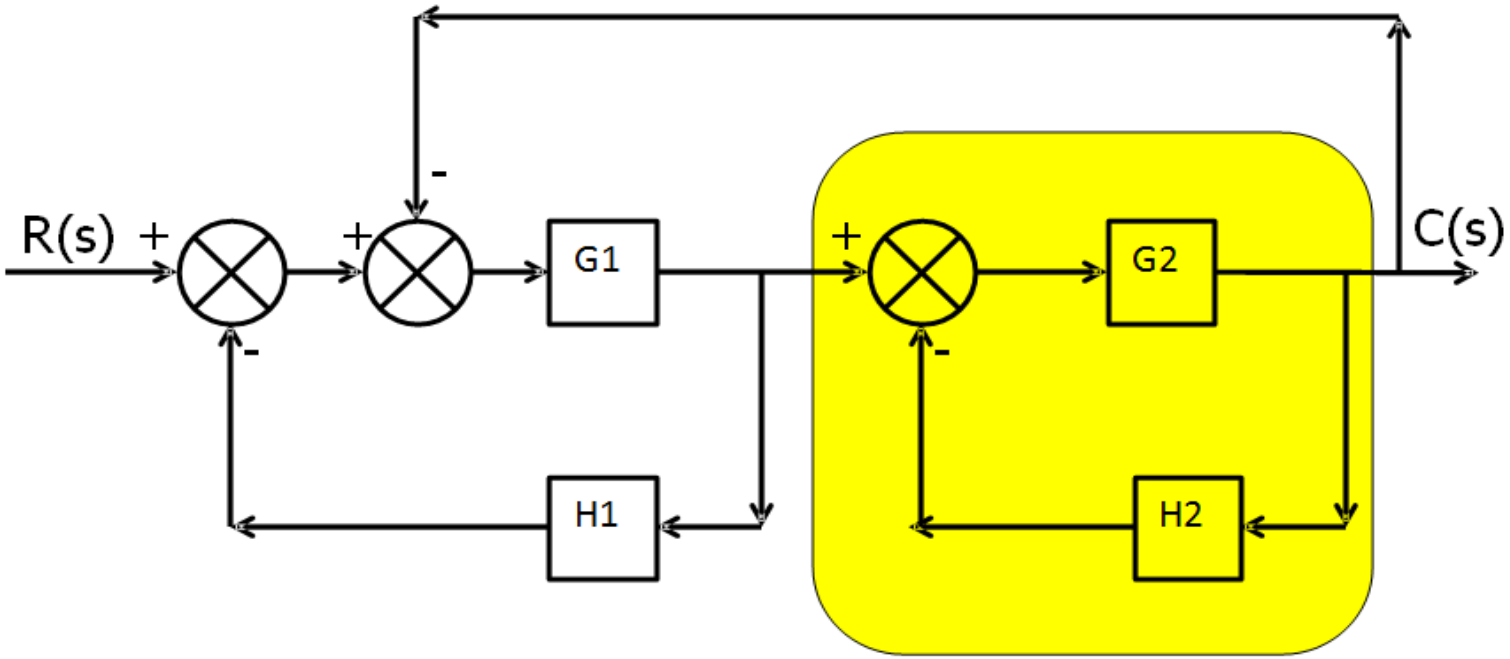

Example 2

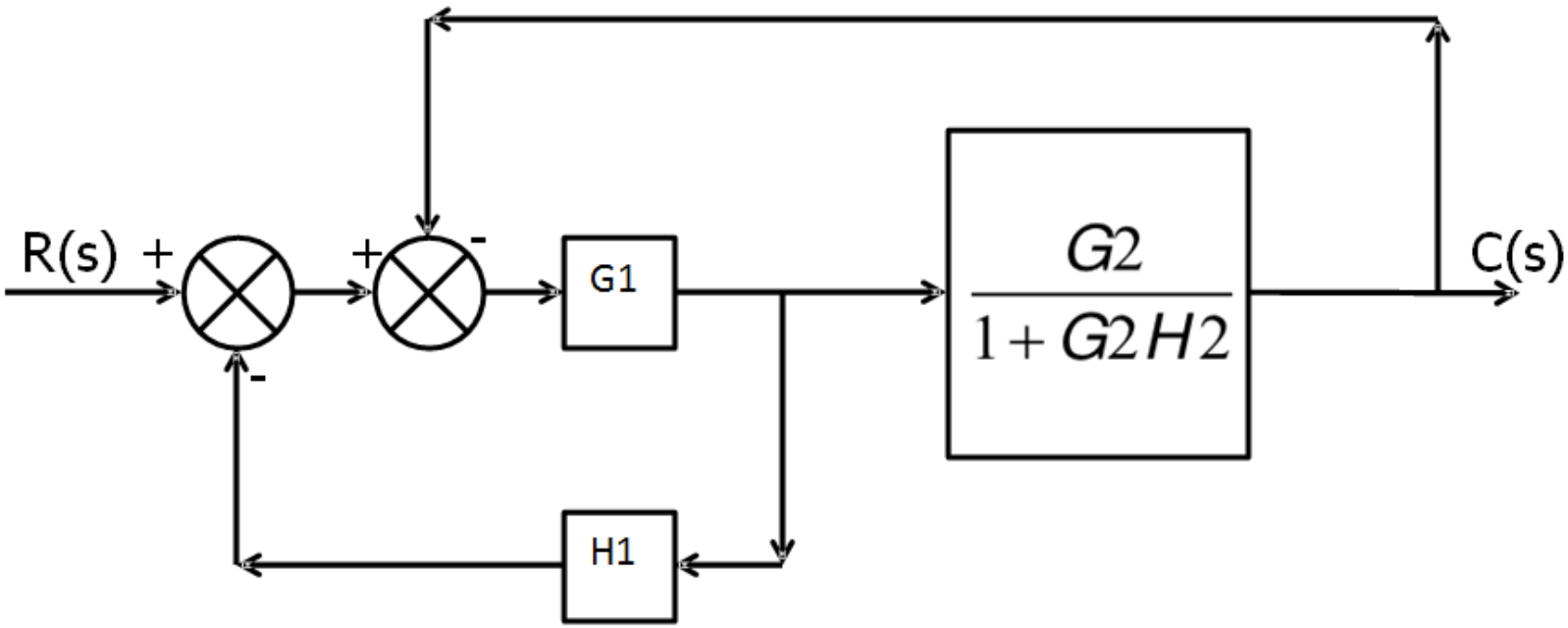

Example 2

- Now Rule 1, 2 or 3 cannot be used directly.
- There are possible ways of going ahead.
  a. Use Rule 4 & interchange order of summing so that Rule 3 can be used on G.H1 loop.
  b. Shift take off point after $\frac{G2}{1+G2H2}$ block reduce by Rule 1, followed by Rule 3.

Which option we have to use????

Example 2

Apply Rule 4: Exchange summing order

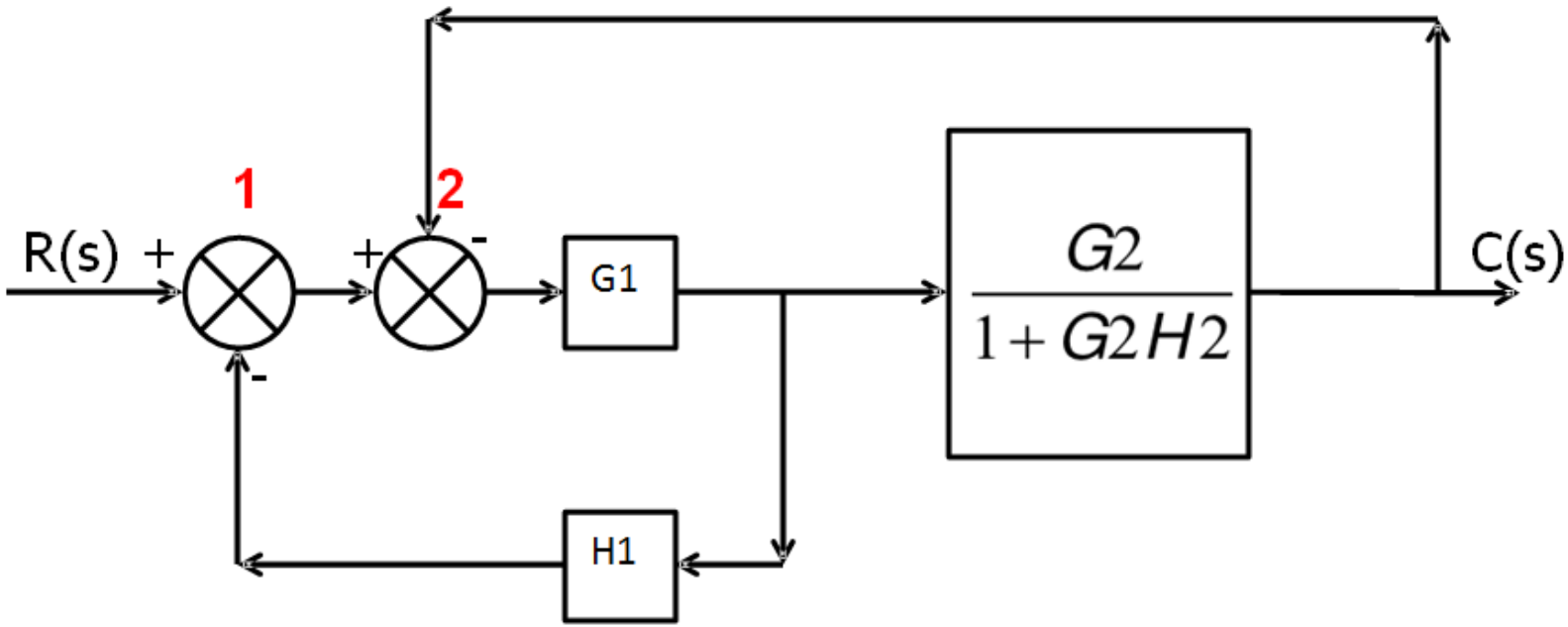

Example 2

Apply Rule 3: Elimination feedback loop

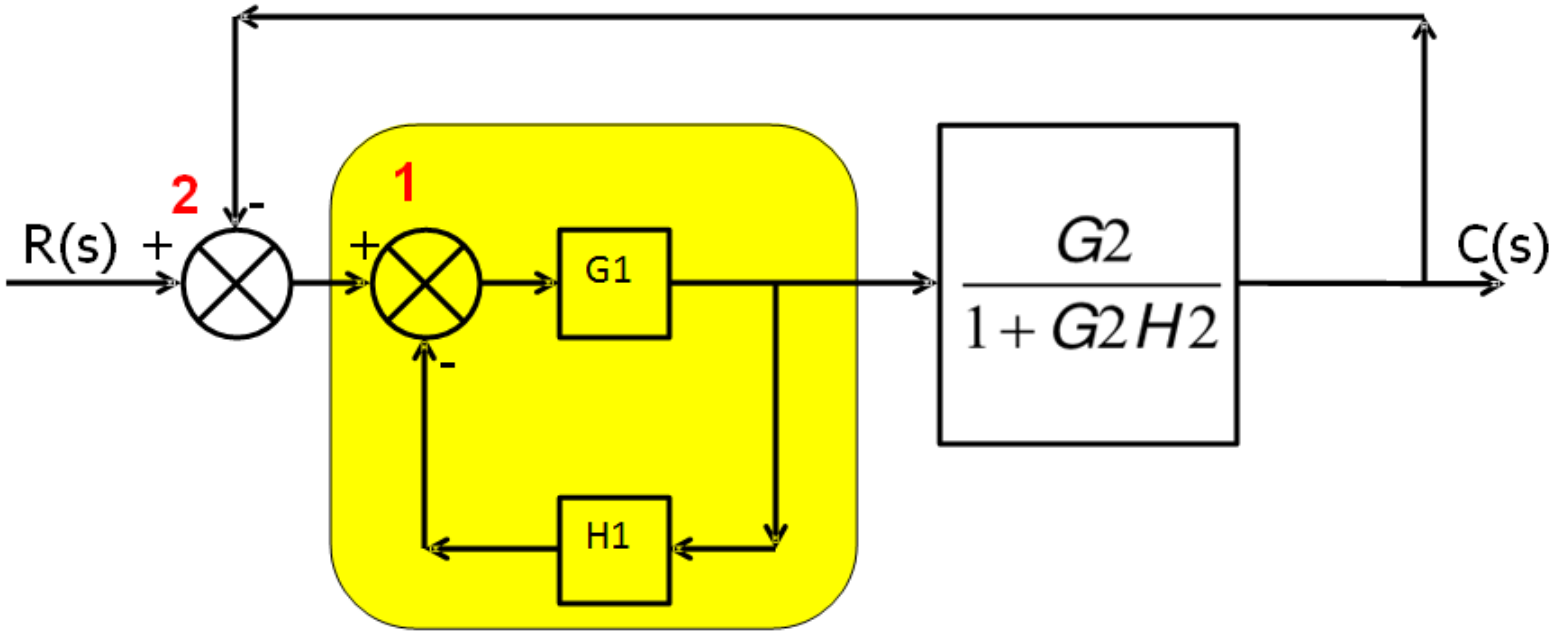

Example 2

Apply Rule 1: Bocks in series

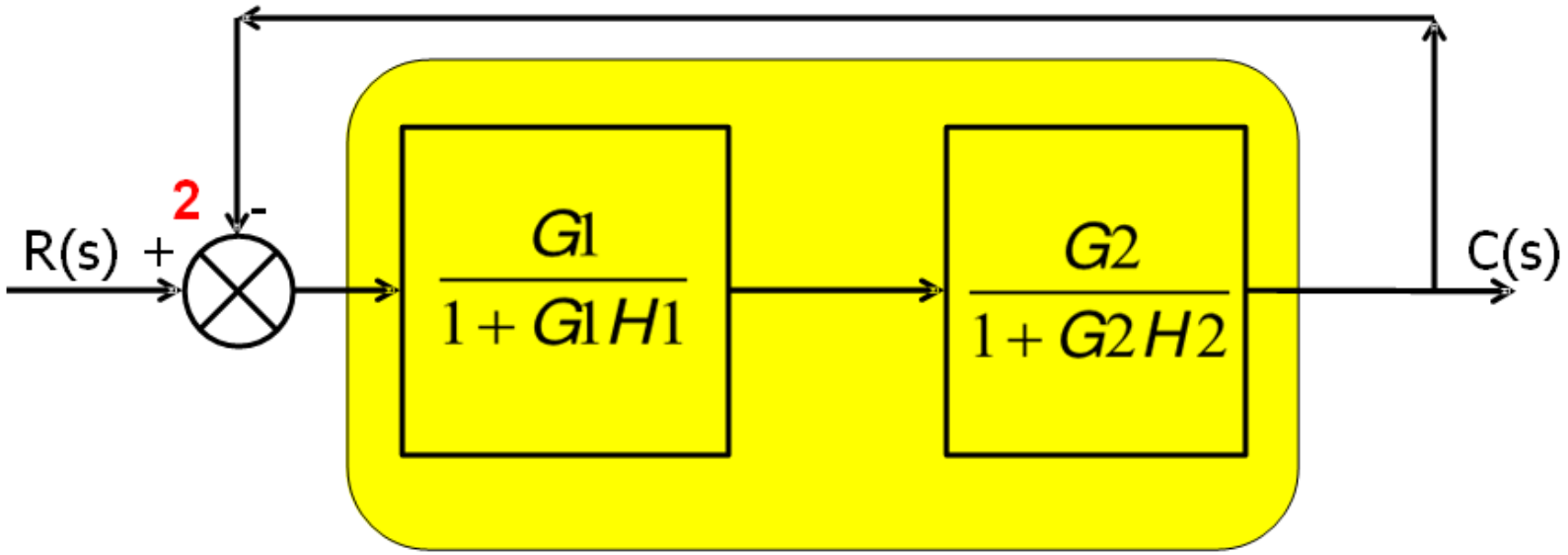

Example 2

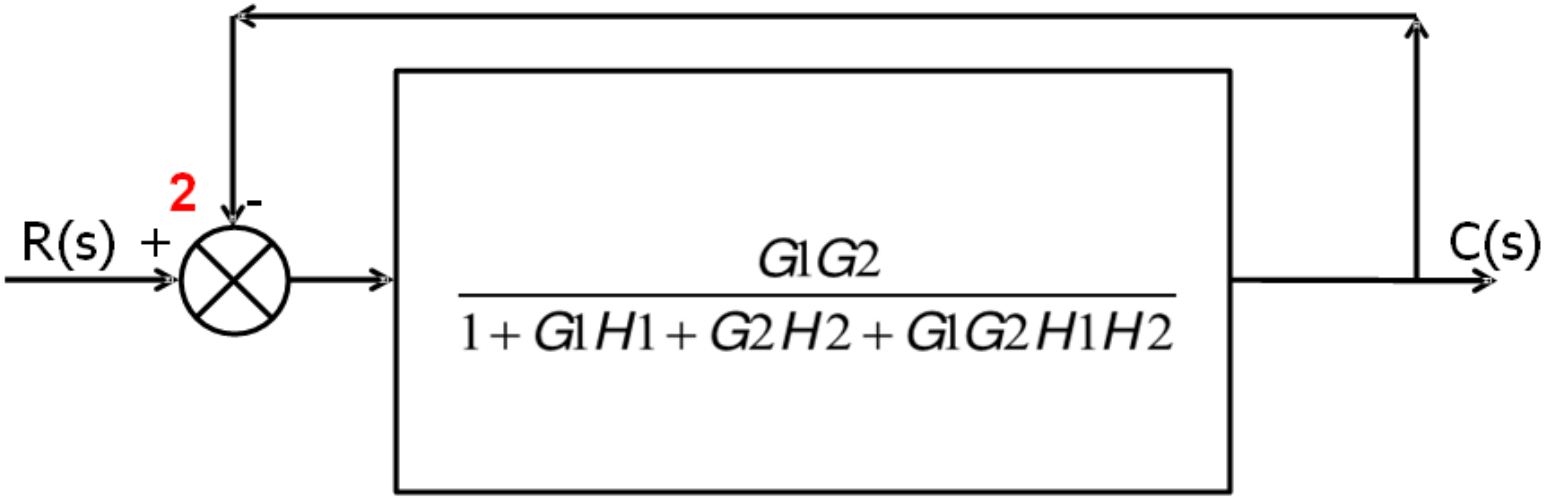

Now which Rule will be applied

-------It is blocks in parallel **OR**

-------It is feed back loop

Example 2

Let us rearrange the block diagram to understand

Apply Rule 3: Elimination of feed back loop

Example 2

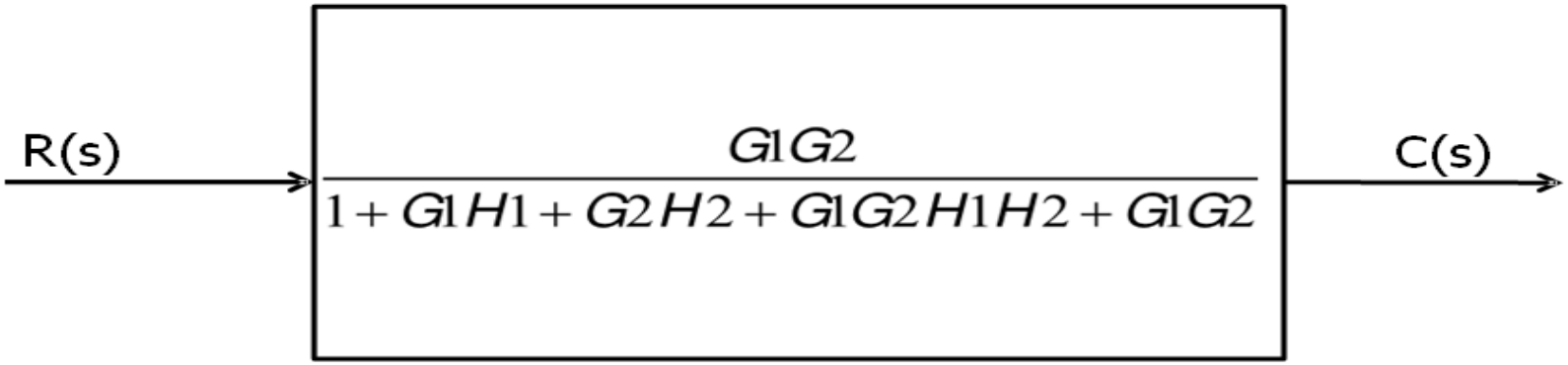

$$\frac{C(s)}{R(s)} = \frac{G1G2}{1+G1H1+G2H2+G1G2H1H2+G1G2}$$

THE DESIGN PROCESS

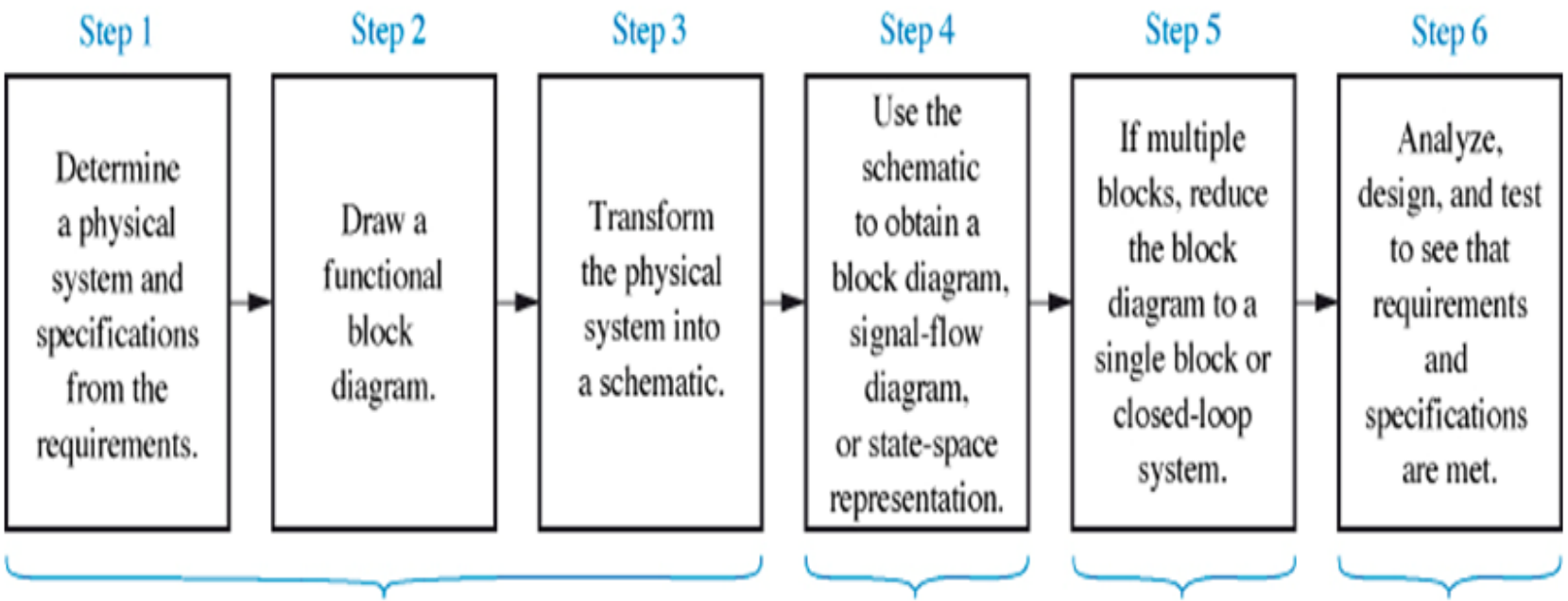

Summary

- There is a common theory that applies to ALL control systems.
- "Open loop" control systems do not check the outcome to see whether it corresponds to the expected effect.
- "Closed loop" control systems compare the current output with some reference value (which is not necessarily constant) in order to calculate an error signal. The error is used to adjust the flow of energy into the controlled system in order to bring the output closer to the target value.
- Control systems differ considerably in their performance. Poor design or execution will impair accuracy, stability, resilience and speed.
- Signals varying at different frequencies traverse the feedback loop at different speeds. This means that the output is delayed (i.e. phase-shifted) with respect to the input, and these delays vary with the signal frequency.

Summary

- The greatest initial accuracy and resilience in the face of varying loads is achieved with a high gain error amplifier, and a large amount of negative feedback. Such systems are **invariably** unstable unless the negative feedback is very quick. Delayed feedback arrives late (i.e. phase-shifted) when the situation has already changed. This causes the feedback to be applied in the wrong direction, making the position worse instead of better.
- If the feedback is inherently slow then the resulting phase shifts limit the maximum usable gain and reduce the performance of the control system. High frequency gain and phase shifts must be correctly optimized for success.
- Very simple control systems operate by on/off control, but most effective control systems operate with smooth feedback that is **proportional** to the magnitude of the error.